Data Device Corporation
1-800-DDC-5757 | 631-567-5600
105 Wilbur Place, Bohemia, NY 11716
service@ddc-web.com | www.ddc-web.com

Mil-Std-1553/1760 Products
NHI-1567 Series
+5V Monolithic Dual Transceivers

Features:

- **Smallest Available, Fully Compliant, Mil-Std-1553A & B, Mil-Std-1760, and MacAir Dual Transceivers *!!***
- **Single +5V +/- 10% Supply *!!***
- **0.95 Watts Maximum Power Dissipation @ 100% Duty Cycle *!!***
- **Output Driver Withstands Short Circuit Fault Indefinitely with Built-In Shutdown/Recovery Circuit *!!***
- **Proprietary Monolithic Design Provides Superior Reliability, Noise Performance and Thermal Impedance *!!***

Description:

The NHI-1567 series of Mil-Std-1553/1760 monolithic dual transceivers are available in 1.000" x .300" ceramic dual in-line and flatpack packages.

Each receiver converts the 1553 bus bi-phase data to complementary RX and RX_L TTL digital outputs for use by the manchester decoder. The device provides independent receiver enables for each channel.

The transmitters will output bi-phase manchester to the coupling transformer when the TX and TX_L inputs are driven by complementary TTL digital data. The device provides an independent transmitter inhibit TXINH for each channel.

To reduce the pin count and package size, the transmitter outputs are connected to the receiver inputs internal to the device for each channel. This results in only two connections BUS & BUS_L to the coupling transformer per channel.

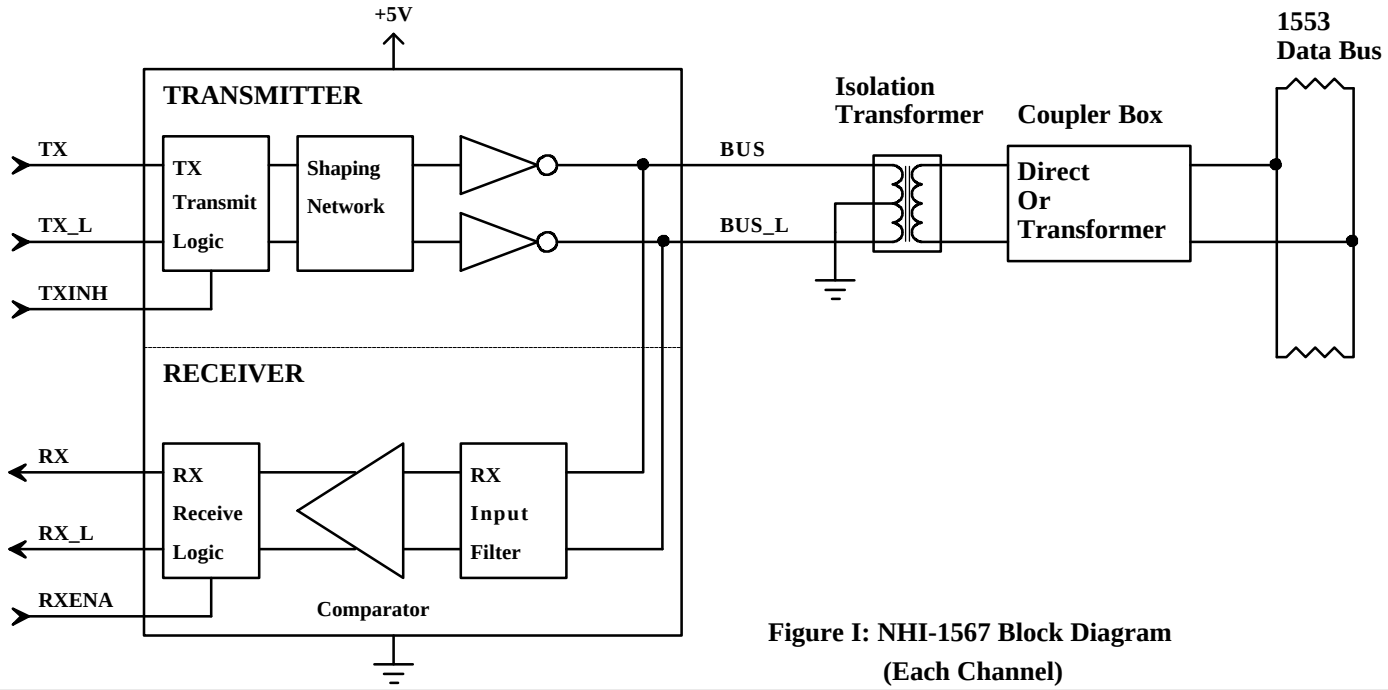

Figure I: NHI-1567 Block Diagram (Each Channel)

NHI-1567 Series

TABLE I: Electrical Specifications

Parameter	Condition	Symbol	Min	Typ	Max	Units
POWER SUPPLY REQUIREMENT		Vcc	4.7		5.5	V
TOTAL SUPPLY CURRENT	Vcc=5.0V, Not Transmitting	Icc1		70	80	mA
	Vcc=5.0V, Transmit one channel @ 50% duty cycle	Icc2		320	340	mA
	Vcc=5.0V, Transmit one channel @ 100% duty cycle	Icc3		570	615	mA
POWER DISSIPATION	Vcc=5.0V, Not Transmitting	Pd1			0.4	W
	Vcc=5.0V, Transmit one channel @ 100% duty cycle	Pd2			0.95	W
OPERATING TEMPERATURE	Junction	Tj	-55		165	°C
	Case	Tc	-55		125	°C
	Storage	Ts	-55		165	°C
THERMAL IMPEDANCE	Junction to Case	θjc			4	°C/W
LOGIC I/O						
RXENA_A, TXA, TXA_L, TXINH_A, RXENA_B, TXB, TXB_L, TXINH_B	Vcc= 5.5V, Vil= 0.0V	Iil			-0.4	mA
	Vcc= 4.5V, Vih= 2.7V	Iih			20	uA
RXA, RXA_L, RXB, RXB_L	Vcc= 5.5V, Iol= -4mA	Vol			0.4	V
	Vcc= 4.5V, Ioh= 400 uA	Voh	2.7			V
RECEIVER						
Input Resistance	Differential	Rin	20			k Ω
Input Capacitance	Differential	Cin			5	pF
Common Mode Rejection Ratio		CMRR	40			dB
Input Level	Differential	Vin			40	Vpp
TRANSMITTER						
Output Voltage	Across 140 Ω load	V_{out}	29		36	Vpp
Rise/Fall Time	10% to 90% of peak to peak output	t_r , t_f	100	150	300	nS
Output DynamicOffset Voltage	Across 35 Ω load	Vdyn	-90		90	mV
Ouput Noise	Differential	Vnpp			10	mVpp
Output Resistance	Differential, not transmitting	Rout	10			kΩ

NHI-1567 Series

Table II: Pin Functions

Pin#	Function	Pin#	Function
1	+5V_A	20	TXA_L
2	BUS_A	19	TXA
3	BUS_A_L	18	TXINH_A
4	RXENA_A	17	RXA
5	GND_A	16	RXA_L
6	+5V_B	15	TXB_L
7	BUS_B	14	TX_B
8	BUS_B_L	13	TXINH_B
9	RXENA_B	12	RXB
10	GND_B	11	RXB_L

Transformer Requirements:

The NHI-1567 series requires a transformer with a turns ratio of 1:2.5 for Direct Coupling, and a turns ratio of 1:1.79 for Transformer Coupling to the Mil-Std-1553 Bus.Please contact Beta Transformer (www.bttc-beta.com) for a recommended transformer. The center tap on the transceiver side of the isolation

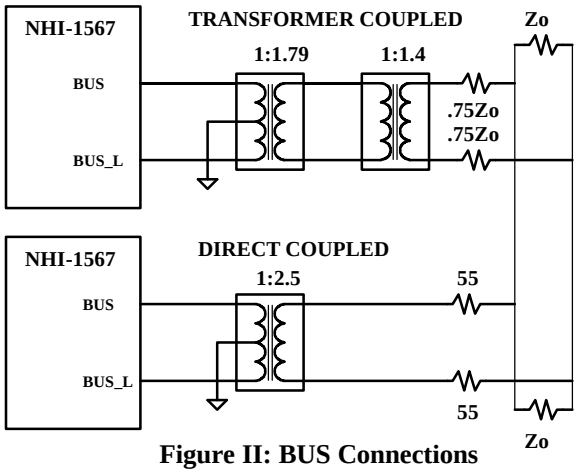

Figure II: BUS Connections

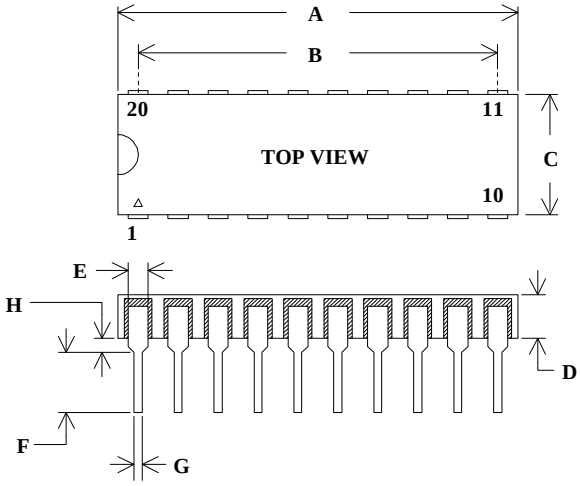

Figure III: Plug-In Package Detail

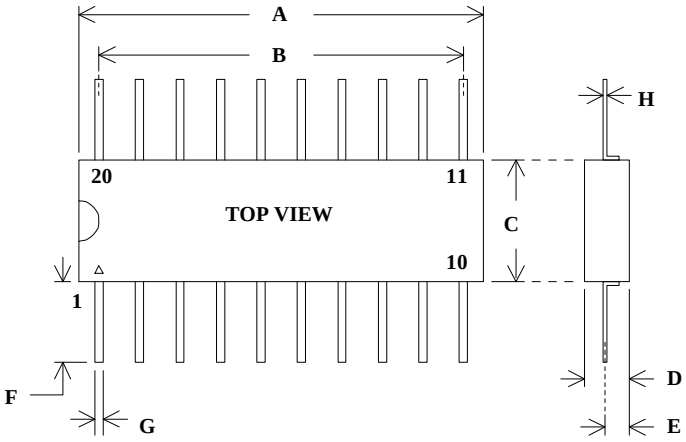

Figure IV: Flatpack Package Detail

Table III: Plug-In Dimensions

DIM	TYP (inches)	TOL (+/- inches)
A	1.000 "	0.010 "
B	9 EQ SP @	0.100 = 0.900 "
C	0.300 "	0.010 "
D	0.110 "	0.012 "
E	0.050 "	TYP
F	0.150 "	MIN
G	0.018 "	0.002 "
H	0.035 "	0.010 "

Table IV: Flatpack Dimensions

DIM	TYP (inches)	TOL (+/- inches)
A	1.000 "	0.010 "
B	9 EQ SP @	0.100 = 0.900 "
C	0.300 "	0.010 "
D	0.110 "	0.012 "
E	0.060 "	0.010 "
F	0.400 "	MIN
G	0.018 "	0.002 "
H	0.010 "	0.002 "

NHI-1567 Series

Transmit Waveforms

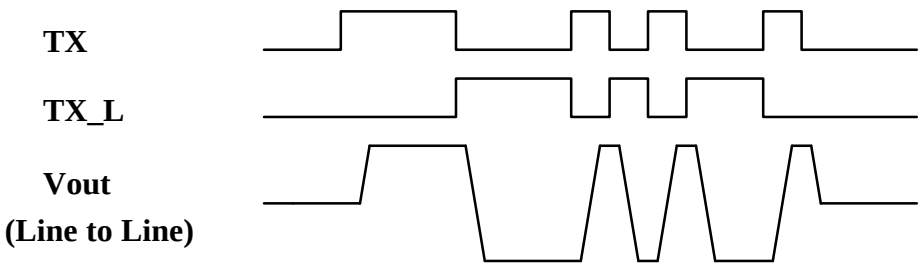

Receive Waveforms

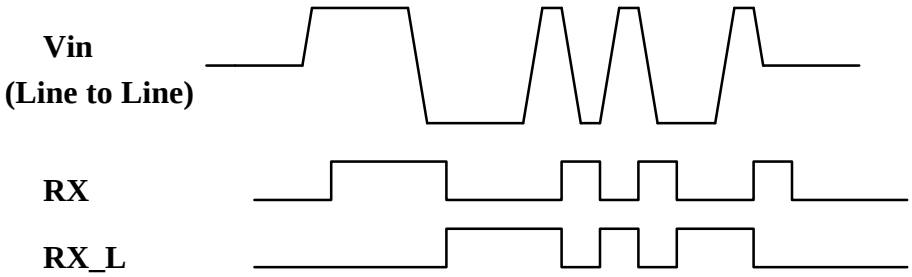

Transmitter Operation:

A high level input on TXINH will inhibit the transmitter outputs. If the TX & TX_L transmitter inputs are both high or both low, the transmitter is also inhibited. The output drivers are short circuit protected and the device will "fold back" to decrease power dissipation under this condition until the fault is removed.

Receiver Operation:

A low level input on RXENA will disable the receiver outputs RX & RX_L regardless of bus activity. The receiver output compatibility may be specified as logic 0 or logic 1 when in standby mode.

**** See Ordering Information**

Ordering Information:

NHI-1567 FP / 883

Reliability Grade

883	=	Fully Compliant with Mil-Std-883
M	=	Screened to Mil-Std-883, -55 to +125 °C
Blank	=	Industrial, -40 to +85 °C

Package Style

Blank	=	Plug-In (Figure III)
FP	=	Flatpack (Figure IV)

Transceiver Type and Decoder Compatibility

67	=	Mil-Std-1553,	RX & RX_L, Standby = Logic 0
68	=	Mil-Std-1553,	RX & RX_L, Standby = Logic 1
69	=	MacAir,	RX & RX_L, Standby = Logic 0
70	=	MacAir,	RX & RX_L, Standby = Logic 1

**** SMD Listing: DESC Drawing# 5962-92061**
See QML-38534 for NHI's Manufacturer Qualification Under Mil-PRF-38534

DATA DEVICE CORPORATION
REGISTERED TO:
ISO 9001:2008, AS9100C:2009-01
EN9100:2009, JIS Q9100:2009
FILE NO. 10001296 ASH09

The first choice for more than 50 years—DDC

DDC is the world leader in the design and manufacture of high reliability data interface products, motion control, and solid-state power controllers for aerospace, defense, and industrial automation.

Inside the U.S. - Call Toll-Free 1-800-DDC-5757

Headquarters and Main Plant
105 Wilbur Place, Bohemia, NY 11716-2426
Tel: (631) 567-5600 Fax: (631) 567-7358
Toll-Free, Customer Service: 1-800-DDC-5757

Web site: www.ddc-web.com

Data Device Corporation

Outside the U.S. - Call 1-631-567-5700

United Kingdom: DDC U.K., LTD
Mill Reef House, 9-14 Cheap Street, Newbury,
Berkshire RG14 5DD, England
Tel: +44 1635 811140 Fax: +44 1635 32264

France: DDC Electronique
10 Rue Carle-Herbert
92400 Courbevoie France
Tel: +33-1-41-16-3424 Fax: +33-1-41-16-3425

Germany: DDC Elektronik GmbH
Triebstrasse 3, D-80993 München, Germany
Tel: +49 (0) 89-15 00 12-11
Fax: +49 (0) 89-15 00 12-22

Japan: DDC Electronics K.K.
Dai-ichi Magami Bldg, 8F, 1-5, Koraku 1-chome,
Bunkyo-ku, Tokyo 112-0004, Japan
Tel: 81-3-3814-7688 Fax: 81-3-3814-7689
Web site: www.ddcjapan.co.jp

Asia: Data Device Corporation - RO Registered in Singapore
Blk-327 Hougang Ave 5 #05-164
Singapore 530327
Tel: +65 6489 4801

The information in this Data Sheet is believed to be accurate; however, no responsibility is assumed by Data Device Corporation for its use, and no license or rights are granted by implication or otherwise in connection therewith. Specifications are subject to change without notice.